lednlux.
illuminate spaces®

OQQU 20

9005 | 9010 | 3000K/CRI90 | 23° | Dali push

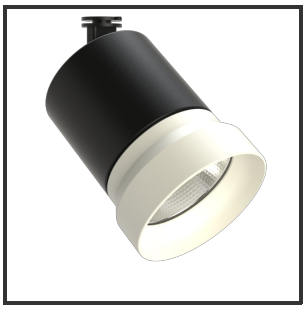

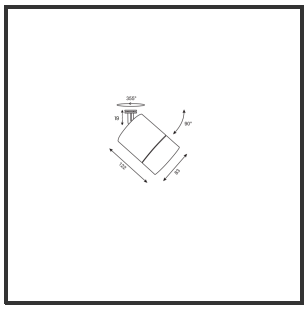

Beamangle	23°	Input current	500mA
CIE Flux Codes	96 99 100 100 100	IP	IP33
Colour Deviation (SDCM)	3 sdcm	Color	RAL9005
Colour Temperature	3000K	Color 2	RAL9010
Max. connected Load	20W	Led type	COB
Connected Voltage	220-240V	Lumen Maintenance	L80B10 bij 50.000
CRI	90	Lumen/W	135lm/W
Dim	Dali push	Luminous flux of luminaire	2000lm
Dimensions	Ø93x122	Material Housing	Aluminium
Energy Efficiency Class	D	Material Lens/Reflector/Diffusor	Aluminium
Forward Voltage	33V	Mounting Type	in 3fase rail
Frequency	50Hz	PF	0,9
IK	06	UGR	19

Reference : 000030796

Product Description

The Oqqo is an efficiency monster in every sense of the word. Its versatility translates in many ways. The mounting method, the variety of colors and the modularity within the different lens rings are its greatest assets. On a technical level it doesn't drop a single stitch, its ingenious design makes it possible to control from 10 to 30W (1000-3000lm), so you can use the same fixture for many different purposes which forms a nice uniform line in your lighting concept. nnWith the High quality Citizen led chip (CLU03j), standard CRI +90 and the Unique aluminum reflectors in the angles 23°, 36° and 60° it proves to excel far from all its competitors. This combined with Signify/Tridonic LED drivers and high quality powder coated components in both standard and on-demand colors make endless pairings available. In addition, it also carries Flexibility highly. It is available in any RAL color, light color or power on demand.

http://www.lednlux.be
BE0820044532

Slamstraat 1
3600 Genk - BE

+32 89 25 44 55
info@lednlux.be